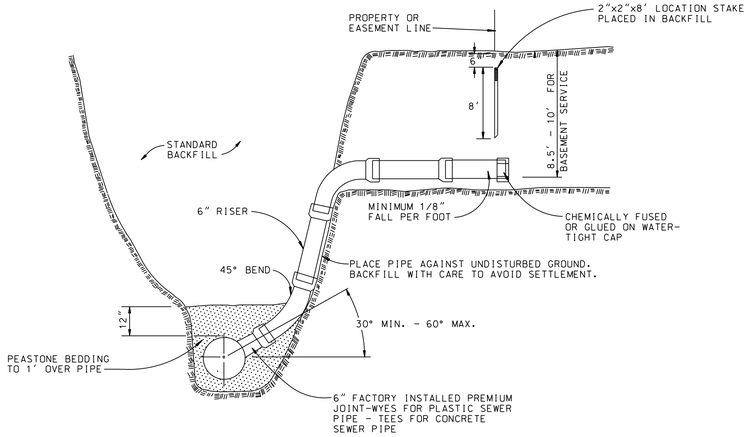

BUILDING LEAD DETAIL

0' - 15' COVER

SANITARY SEWER CONSTRUCTION NOTES

1. ALL CONSTRUCTION SHALL CONFORM TO THE CURRENT STANDARDS AND SPECIFICATIONS OF THE CITY OF TROY DEVELOPMENT STANDARDS. PRIOR TO CONSTRUCTION, THE CONTRACTOR SHALL ATTEND A PRECONSTRUCTION MEETING AT A TIME AND PLACE ARRANGED BY THE CITY ENGINEER, IN WHICH VARIOUS UTILITY COMPANIES AND GOVERNMENTAL AGENCY REPRESENTATIVES WILL BE PRESENT. THE OWNER'S ENGINEER SHALL SUBMIT APPROVED PLANS TO ALL UTILITY COMPANIES AND GOVERNMENTAL AGENCIES 10 DAYS PRIOR TO PRECONSTRUCTION MEETING. CONSTRUCTION SHALL START WITHIN 3 WEEKS OF MEETING. THE CONTRACTOR SHALL NOTIFY THE CITY ENGINEER 72 HOURS PRIOR TO STARTING ANY WORK.

2. AT ALL CONNECTIONS TO THE EVERGREEN SANITARY SEWERS OR TO EXTENSIONS THERETO, AND BEFORE START OF CONSTRUCTION, THE CONTRACTOR MUST REQUEST AND HAVE IN HIS POSSESSION AN APPROVED CONNECTIONS PERMIT ISSUED BY THE OAKLAND COUNTY DRAIN COMMISSIONERS OFFICE.

3. NO SEWER INSTALLATION SHALL HAVE AN INFILTRATION EXCEEDING 100 GALLONS PER INCH OF DIAMETER PER MILE OF PIPE PER 24 HOUR PERIOD. EXFILTRATION TESTING SHALL BE CONDUCTED WHERE GROUND WATER IS INSUFFICIENT. ALL INSTALLATIONS SHALL ALSO PASS LOW PRESSURE AIR TEST AS SPECIFIED IN THE CITY STANDARDS.

   ABS COMPOSITE PIPE AND ANY APPROVED PLASTIC PIPE SHALL BE SUBJECT TO DEFLECTION TEST 30 DAYS AFTER CONSTRUCTION WITH A NINE SIDED MANDREL. THE CONTRACTOR MUST SUPPLY THE MANDREL AND PERFORM THE TEST. THE OWNER WILL WITNESS THE TEST. DEFLECTION SHALL NOT EXCEED 5%. THE OWNER RESERVES THE RIGHT TO TEST THE SEWER FOR DEFLECTION NOT TO EXCEED 7% DURING THE PERIOD OF THE MAINTENANCE BOND. ANY SEWER FOUND EXCEEDING THESE LIMITS SHALL BE REPLACED BY AND AT THE CONTRACTOR'S EXPENSE.

   AS PART OF THE FINAL INSPECTION, THE CONTRACTOR SHALL PROVIDE FOR TELEVISION INSPECTION OF THE SANITARY SEWER LINES INSTALLED UNDER THIS CONTRACT. THE CONTRACTOR SHALL ARRANGE FOR, ENGAGE AND PAY ALL EXPENSES INVOLVED FOR THE SERVICES OF A COMPETENT COMPANY TO PERFORM THIS TELEVISION INSPECTION. THE INSPECTION SHALL BE CARRIED OUT UNDER THE DIRECT SUPERVISION OF THE INSPECTOR WITH ALL TELEVISION INSPECTION BEING OBSERVED BY REPRESENTATIVES OF THE CITY AND THE CONTRACTOR. ANY TELEVISION VIEWING PERFORMED IN THE ABSENCE OF THE CITY OR A REPRESENTATIVE OF THE CITY SHALL NOT BE CONSIDERED A PART OF THE FINAL INSPECTION. ALL TELEVISION INSPECTION SHALL BE RECORDED ON VIDEO TAPE AND TURNED OVER TO THE CITY FOR READY REFERENCE AT A LATER DATE. THE VIDEO RECORDING SHALL DISPLAY CONTINUOUSLY THE DATE, TIME AND ENGINEERING STATIONS AND SHALL PERIODICALLY DISPLAY THE NAME OF THE PROJECT, NAME OF THE AREA COVERED AND DIRECTION OF TRAVEL. THE TAPE MUST BE 1/2 INCH VHS FORMAT.

4. INFILTRATION TESTING WHEN REQUIRED BY THE CITY ENGINEER SHALL BE PROVIDED BY THE CONTRACTOR AT NO ADDITIONAL EXPENSE TO THE CITY. TEST SECTIONS SHALL GENERALLY BE LIMITED TO A MAXIMUM LENGTH OF ONE HALF MILE. THE ENGINEER RESERVES THE RIGHT TO TEST SHORTER PIPE LENGTH SEGMENTS IF HE DEEMS IT NECESSARY TO ASSURE THAT NO SEGMENT EXCEEDS THE INFILTRATION LIMITS.

5. BUILDING LEAD PIPE, WYES AND CAPS SHALL BE SOLID WALL PLASTIC PIPE, 6" DIA., SDR 23.5 WITH JOINTS AS SPECIFIED IN NOTE #14. THE JOINT BETWEEN TWO DISSIMILAR SIZES OR TYPES OF BUILDING LEAD PIPE SHALL BE MADE WITH A PROPER PROPER FITTING ACCEPTABLE TO THE CITY ENGINEER.

AIR TEST TABLE

MINIMUM HOLDING TIME IN SECONDS REQUIRED FOR PRESSURE TO DROP FROM 4 TO 3 PSI

LENGTH OF LINE IN FEET	PIPE DIAMETER 4"	6"	8"	10"	12"	15"	18"	21"	24"	27"	30"	33"	36"
X													
25	4	10	18	28	40	62	89	121	158	200	248	299	356
50	9	20	35	55	79	124	178	243	317	401	495	599	713
75	10	30	53	83	119	186	267	364	475	601	743	898	1020
100	18	40	70	110	158	248	356	485	634	765	851	935	
125	22	50	88	138	198	309	446	595	680				
150	26	59	106	165	238	371	510						
175	31	69	123	193	277	425							
200	35	79	141	220	317								
225	40	89	158	248	340								
250	44	99	176	275									
275	48	109	194	283									
300	53	119	211										
350	62	139	227										
400	70	158											
450	79	170											
500	88												
550	97												
600	106												
650	113	170	227	283	340	425	510	595	680	765	851	935	1020

NOTE: TO BE USED WHEN TESTING ONE DIAMETER ONLY

6. ALL NEW MANHOLES SHALL HAVE APPROVED FLEXIBLE, WATER-TIGHT SEALS WHERE PIPES PASS THROUGH WALLS. MANHOLES SHALL BE PRECAST REINFORCED CONCRETE IN ACCORDANCE WITH ASTM C478 CURRENT SPECIFICATIONS. PRECAST MANHOLE JOINTS AND GASKETS SHALL BE MODIFIED TONGUE AND GROOVE IN ACCORDANCE WITH ASTM C361 CURRENT SPECIFICATIONS. PRECAST MANHOLE CONE SECTIONS SHALL BE CITY OF TROY MODIFIED ECCENTRIC CONE TYPE. ALL MANHOLES SHALL BE PROVIDED WITH BOLTED, WATER-TIGHT COVERS. MANHOLE STEPS SHALL NORMALLY BE PROVIDED ON A BACK WALL OF THE MANHOLE FURTHEST FROM TRAFFIC.

7. AT THE CONNECTIONS TO MANHOLES, SEWERS OR EXTENSIONS THERETO, DROP CONNECTIONS WILL BE REQUIRED WHEN THE DIFFERENCE IN INVERT ELEVATIONS EXCEEDS 18 INCHES. ALL DROP CONNECTIONS ARE TO BE EXTERIOR. INTERNAL DROP CONNECTIONS ARE NOT ACCEPTABLE.

8. EXISTING MANHOLES SHALL BE TAPPED WITH THE "KOR-N-SEAL" METHOD, WITH A WATER-TIGHT RUBBER BOOT FOR SEWERS 6" THRU 15" IN DIAMETER. MANHOLE TAPS FOR 18" DIAMETER SEWERS AND LARGER SHALL HAVE HOLES DRILLED AT 4 INCHES CENTER TO CENTER AROUND THE PERIPHERY OF THE OPENING TO CREATE A PLANE OF WEAKNESS BEFORE BREAKING OUT THE SECTION. NON-SHRINK GROUT SHALL BE USED TO SEAL THE OPENING AND A CONCRETE COLLAR SHALL BE POURED 12 INCHES AROUND THE PIPE AND EXTEND 12 INCHES BEYOND THE OPENING.

9. NEW MANHOLES CONSTRUCTED IN THE CITY OF TROY SHALL HAVE COVERS READING "CITY OF TROY" IN RAISED LETTERS. BOLT DOWN FRAMES AND COVERS ARE REQUIRED.

10. NO GROUND WATER, STORM WATER, CONSTRUCTION WATER, DOWNSPOUT DRAINAGE OR WEEP TILE DRAINAGE SHALL BE ALLOWED TO ENTER ANY SANITARY SEWER INSTALLATION.

11. PRIOR TO ANY EXCAVATION, THE CONTRACTOR SHALL TELEPHONE MISS DIG (1-800-482-7171) FOR THE LOCATION OF UNDERGROUND GAS AND CABLE FACILITIES AND SHALL ALSO NOTIFY REPRESENTATIVES OF OTHER UTILITIES LOCATED IN THE VICINITY OF THE WORK.

    THE CONTRACTOR SHALL ASSUME RESPONSIBILITY FOR THE PROTECTION OF ALL EXISTING UTILITIES DURING CONSTRUCTION. ALL COSTS FOR LOCATING, REMOVING AND REPLACING OR RELOCATING THESE UTILITIES SHALL BE INCLUDED IN THE COST OF CONSTRUCTING THE SANITARY SEWER. ALL UTILITIES DAMAGED DURING CONSTRUCTION SHALL BE REPAIRED WITH LIKE MATERIAL. THE CONTRACTOR SHALL VERIFY THE DEPTH AND HORIZONTAL LOCATION OF ALL EXISTING UTILITIES BEFORE ANY WORK IS STARTED. THE EXACT LOCATION OF EXISTING UTILITIES SHALL BE DETERMINED BY HAND DIGGING.

12. THE CONTRACTOR SHALL MAINTAIN ALL EXISTING SANITARY SEWER, WATER OR STORM SEWER SERVICE CONNECTIONS DURING CONSTRUCTION. ANY ADJUSTMENTS OR REPAIRS TO THESE SERVICES SHALL BE MADE BY THE CONTRACTOR AND THE COST SHALL BE INCLUDED IN THE COST FOR CONSTRUCTING THE SANITARY SEWER, UNLESS OTHERWISE PROVIDED IN THE CONTRACT.

13. THE CONTRACTOR IS REQUIRED TO CONTACT THE INSPECTION SECTION OF DETROIT WATER AND SEWERAGE DEPARTMENT AT 833-4682, THREE WORKING DAYS PRIOR TO START OF ANY SANITARY SEWER CONSTRUCTION.

14. SEWER PIPE MATERIAL:

    1. 8" THROUGH 15" PIPE SHALL BE A.B.S. (ACRYLONITRILE- BUTADIENE-STYRENE) OR P. V. C. (POLY VINYL CHLORIDE) COMPOSITE SEWER PIPE CONFORMING TO THE CURRENT ASTM D2680 SPECIFICATIONS WITH TYPE SC JOINTS FOR ABS AND ELASTOMERIC RUBBER GASKETED JOINTS FOR PVC.

    2. 18" AND LARGER PIPE SHALL BE REINFORCED CONCRETE CIRCULAR SEWER PIPE CONFORMING TO THE CURRENT ASTM SPECIFICATION C-76 (WALL C) WITH SIZE AND CLASS AS INDICATED ON THE PLANS. ALL REINFORCED CONCRETE SEWER PIPE SHALL BE CAST WITH REINFORCING STEEL EXTENDING INTO THE SPIGOTS. ALL JOINTS AND GASKETS SHALL BE MODIFIED TONGUE AND GROOVE, CONFORMING WITH THE REQUIREMENTS OF ASTM (C 361).

    3. EXTRA STRENGTH VITRIFIED CLAY PIPE CONFORMING TO THE CURRENT ASTM SPECIFICATION C - 700. FOR USE IN INDUSTRIAL AREAS ONLY.

15. IN INDUSTRIAL AREAS, OR ANY OTHER AREAS WHERE DEEMED NECESSARY BY THE CITY ENGINEER, PRIVATE SERVICE CONNECTIONS MADE TO THE SERVICE LEAD MUST HAVE AN ACCESSIBLE SAMPLING AND MONITORING MANHOLE. THE MANHOLE SHALL BE LOCATED ON PRIVATE PROPERTY AT A LOCATION APPROVED BY THE CITY ENGINEER.

16. BUILDING LEAD CONNECTIONS SHALL BE MADE WITH 6" WYES FOR A.B.S. OR P.V.C. AND 6" TEES FOR CONCRETE PIPE. WYES FOR ABS OR PVC AND PIPE SHALL BE FACTORY FABRICATED (NOT EXTRUDED) AND SHALL BE CHECKED FOR IRREGULARITIES WHICH COULD AFFECT THE DEFLECTION TEST PRIOR TO INSTALLATION.

17. A CITY, OAKLAND COUNTY ROAD COMMISSION, AND/OR MICHIGAN DEPARTMENT OF TRANSPORTATION PERMIT IS REQUIRED FOR ALL CONSTRUCTION WITHIN THEIR ROAD RIGHT-OF-WAYS. IT IS THE CONTRACTOR'S RESPONSIBILITY TO SECURE ALL PERMITS AND BONDS PRIOR TO CONSTRUCTION, OR INSURE THAT ALL REQUIRED PERMITS AND BONDS HAVE BEEN OBTAINED PRIOR TO CONSTRUCTION.

18. THE CONTRACTOR SHALL ABIDE BY ALL THE REQUIREMENTS OF THE ROAD RIGHT-OF-WAY OWNER REGARDING CONSTRUCTION OF WATER AND SEWER MAINS, MAINTAINING TRAFFIC, BARRICADING, BORING, BACKFILL AND RESTORATION. THERE WILL BE NO ADDITIONAL COMPENSATION DUE THE CONTRACTOR FOR COMPLYING WITH THESE REQUIREMENTS.

19. NO WASTE EXCAVATION MATERIAL SHALL BE DISPOSED OF BY PLACING IT IN ANY FLOODPLAIN OR WETLAND OF THE STATE UNLESS APPROPRIATE PERMITS HAVE BEEN ISSUED. THE CONTRACTOR OR PROPERTY OWNER MUST OBTAIN LOCAL FILL PERMITS FOR ANY MATERIALS DEPOSITED UPON LANDS WITHIN ANY CITY, VILLAGE OR TOWNSHIP.

20. THE CONTRACTOR SHALL APPLY TO THE CITY OF TROY ENGINEERING DEPARTMENT AND OBTAIN A SOIL EROSION CONTROL PERMIT UNDER THE ACT 347 PRIOR TO MAKING ANY EARTH CHANGES.

21. PRIOR TO THE START OF CONSTRUCTION, THE CONTRACTOR SHALL FURNISH MATERIAL CERTIFICATES TO THE CITY VERIFYING THAT ALL THE MATERIALS USED ON THE PROJECT ARE IN ACCORDANCE WITH THE SPECIFICATIONS.

22. COMPACTED SAND BACKFILL IS TO BE USED EXCLUSIVELY AT ALL ROAD CROSSINGS, DRIVEWAYS AND SIDEWALKS THROUGHOUT THE COURSE OF THE PROJECT. IN ROADWAYS AND DRIVEWAYS, THE TOP 12 INCHES OF THE EXCAVATION SHALL BE FILLED WITH 21AA LIMESTONE. EXCEPT AS PROVIDED IN THE SPECIFICATIONS, THERE WILL BE NO ADDITIONAL COMPENSATION FOR COMPLYING WITH THIS REQUIREMENT.

23. IF AN EXISTING GRAVEL ROAD IS DISTURBED BY CONSTRUCTION EQUIPMENT OR BY STOCKPILING OF MATERIALS OUTSIDE THE EXCAVATION AREA, A MINIMUM OF 250 POUNDS PER SQ. YD. OF 21AA LIMESTONE OR APPROVED EQUAL SHALL BE USED TO REPLACE THE DISTURBED AREA.

24. ALL CONSTRUCTION CHANGES MUST HAVE WRITTEN APPROVAL OF THE PROJECT ENGINEER.

25. THE CONTRACTOR SHALL BE REQUIRED TO COMPLETE ALL WORK IN AN EXPEDITIOUS MANNER AND SHALL NOT STOP CONSTRUCTION EXCEPT FOR REASONS BEYOND HIS CONTROL SUCH AS, BUT NOT LIMITED TO STRIKES, WEATHER AND UNAVAILABILITY OF MATERIALS.

26. THE CONTRACTOR SHALL PROVIDE A 3 YEAR MAINTENANCE AND GUARANTEE BOND TO THE CITY, DATED FROM THE TIME OF FINAL ACCEPTANCE BY THE CITY ENGINEER. A PERFORMANCE BOND SHALL ALSO BE PROVIDED. ALL BONDS SHALL BE FOR 100% OF CONSTRUCTION COST.

27. ALL PRECAST MANHOLES, SLAB BASES, CONCRETE PIPE AND CONCRETE CHANNELIZATION SHALL BE MANUFACTURED WITH TYPE II, IP OR IIA CEMENT.

28. TRENCH DETAIL" A" (T.D.-A) - BACKFILL TO A POINT 12" ABOVE THE PIPE SHALL BE AS SPECIFIED ON THE PLANS. THE REMAINDER OF THE BACKFILL SHALL BE MADE WITH SUITABLE EXCAVATED MATERIAL (EXCLUDING BLUE CLAY) PLACED IN ONE-FOOT LAYERS WITH EACH LAYER BEING THOROUGHLY COMPACTED BY APPROVED MECHANICAL METHODS, OR OTHER EFFECTIVE MEANS HAVING THE APPROVAL OF THE ENGINEER, TO A DENSITY EQUIVALENT TO THE UNDISTURBED ADJACENT SOIL, OR 90% OF MAX. UNIT WEIGHT, WHICHEVER IS GREATER. SPECIAL BACKFILL WILL NOT BE PAID FOR SEPARATELY BUT SHALL BE INCLUDED IN THE COST OF CONSTRUCTING THE SANITARY SEWER. WHEN TRENCH DETAIL" A" IS SPECIFIED, THERE WILL BE NO ADDITIONAL COMPENSATION FOR SAND BACKFILL (T.D.-B) OF GRAVEL, SLAG OR HARD SURFACED PRIVATE DRIVEWAYS, PARKING LOTS OR SIDEWALKS, WHICH SHALL BE INCLUDED IN THE COST OF CONSTRUCTING THE SANITARY SEWER (SEE NOTE 23). ALL AREAS OF SUCH TRENCH DETAIL A SHALL BE SURFACED WITH GRAVEL, STONE, PAVEMENT OR TOPSOIL IN ACCORDANCE WITH THE REQUIREMENTS OF RESTORATION (SEE NOTE 24).

29. TRENCH DETAIL" B" (T.D.-B) - BACKFILL TO A POINT 12" ABOVE THE PIPE SHALL BE AS SPECIFIED ON THE PLANS. THE REMAINDER OF ALL TRENCHES UNDER PUBLIC ROADWAYS AND WITHIN THAT AREA BELOW A LINE PROJECTED AT A 1 ON 1 SLOPE DOWN AND AWAY FROM A POINT 3 FEET OUTSIDE OF THE BACK OF CURB, EDGE OF PAVEMENT OR EDGE OF SHOULDER AREA, OR AS SPECIFIED ON THE PLANS, SHALL BE BACKFILLED WITH BANKRUN SAND MEETING THE REQUIREMENTS OF POROUS MATERIAL, MDOT SEC. 8.02.05, CLASS II, AND IS TO BE COMPACTED TO 95% OF MAX. UNIT WEIGHT. WHEN TRENCH DETAIL B IS IN A DITCH OR TURF AREA, IT SHALL BE SURFACED WITH 2" TO 12" OF ORGANIC CLAY MATERIAL AND WITH 4" OF TOPSOIL. ALL OTHER AREAS OF TRENCH DETAIL B SHALL BE SURFACED WITH GRAVEL, STONE OR PAVEMENT IN ACCORDANCE WITH THE REQUIREMENTS OF RESTORATION (SEE NOTE 24).

30. GREASE, OIL AND SAND INTERCEPTORS SHALL BE INSTALLED BY THE USER WHEN THE CITY ENGINEER DETERMINES THEY ARE NECESSARY FOR THE PROPER HANDLING OF LIQUID WASTES, TO REMOVE GREASE IN EXCESSIVE AMOUNTS, TO REMOVE ANY FLAMMABLE WASTES, SAND AND OTHER HARMFUL INGREDIENTS. ALL INTERCEPTORS SHALL BE OF A TYPE AND CAPACITY APPROVED BY THE MUNICIPALITY, SHALL BE LOCATED SO AS TO BE RAPIDLY AND EASILY ACCESSIBLE FOR CLEANING AND INSPECTION, AND SHALL BE CONTINUOUSLY MAINTAINED BY THE USER IN AN OPERATING CONDITION TO ACCOMPLISH THE REQUIRED RESULT. ALL RESTAURANTS OR ESTABLISHMENTS INVOLVED IN THE PREPARATION OF FOOD SHALL INSTALL A GREASE INTERCEPTOR. ALL GREASE INTERCEPTORS SHALL BE CONSTRUCTED IN ACCORDANCE WITH THE DETAIL AND SHALL HAVE A MINIMUM CAPACITY OF 1000 GALLONS. THE DETAIL SHOWN BELOW IS NOT DESIGNED TO WITHSTAND TRAFFIC LOADS.

31. THE VERTICAL TOLERANCE FOR SANITARY MANHOLE RIM GRADES ARE AS FOLLOWS:

    A) IN RIGHT OF WAY 0.00 FEET TO +0.25 FEET

    B) NOT IN RIGHT OF WAY 0.00 FEET TO +0.25 FEET

32. MANHOLE STEPS SHALL BE FACTORY INSTALLED AT 16 INCHES CENTER TO CENTER SPACING. STEPS SHALL BE M.A. INDUSTRIES P.S.I. POLYPROPYLENE MSU #360 ALU POLY (OR APPROVED EQUAL).

33. THE CONTRACTOR IS REQUIRED TO CONTACT THE OFFICE OF THE OAKLAND COUNTY PUBLIC WORKS COMMISSIONER AT 858-1075 , 72 HRS. BEFORE CONSTRUCTION.

34. ALL SANITARY SEWER LEADS SHALL BE MARKED WITH A 2"x2"x8' LOCATION STAKE BURIED TO 6" BELOW FINISH GRADE

35. BEFORE FINAL ACCEPTANCE AS-BUILT SEPIA MYLARS AND 3 SETS OF BLUE LINE PRINTS MUST BE SUBMITTED TO THE CITY ENGINEER

36. SANITARY LEADS SHALL BE EXTENDED UNDER PROPOSED BUILDING FOOTINGS OR BASEMENT FOOTINGS PRIOR TO CONSTRUCTION OF SAID FOOTINGS. A RISER SHALL BE INSTALLED 3' MINIMUM ABOVE PROPOSED FLOOR AND CAPPED UNTIL INTERNAL PLUMBING IS CONNECTED.

37. INDIVIDUAL SANITARY SERVICE LEADS SHALL BE REQUIRED FOR EACH SEPARATE UNIT WITHIN A PROPOSED COMMERCIAL, INDUSTRIAL AND/OR MULTIPLE FAMILY RESIDENTIAL BUILDINGS.

38. THE ENTIRE PROJECT AREA OF PUBLICLY FUNDED PROJECTS, AND ALL AREAS NOT UNDER THE OWNERSHIP OF ANY PRIVATE DEVELOPER FOR PRIVATELY FUNDED PROJECTS, SHALL BE VIDEO TAPED IN COLOR PRIOR TO THE START OF CONSTRUCTION. THE TAPE SHALL BE UTILIZED BY THE TOWNSHIP TO DETERMINE CONSTRUCTION RELATED DAMAGE AND TO ASSURE ADEQUATE RESTORATION. THE TAPE SHALL BE STANDARD 1/2" VHS FORMAT.

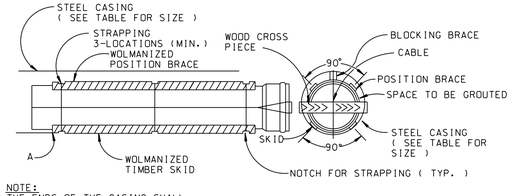

NOTE:
THE ENDS OF THE CASING SHALL
BE SEALED AFTER THE SEWER
IS INSTALLED THROUGH THE CASING

PIPE SIZE	RECOMMENDED MINIMUM CASING DIAMETER	MINIMUM WALL THICKNESS
6"	12"	.375
8"	16"	.375
10"	18"	.375
12"	20"	.375
15"	24"	.406
18" & 21"	36"	.532
24"	42"	.563
27" & 30"	48"	.625
36"	54"	.688
42"	60"	.750
48"	66"	.813

STEEL CASING REQUIREMENTS

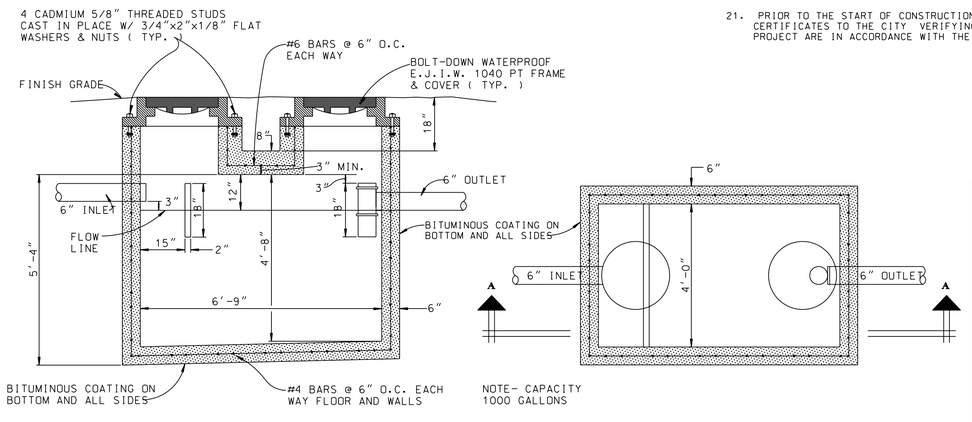

GREASE INTERCEPTOR (EXTERIOR)

CITY OF TROY

OAKLAND COUNTY, MICHIGAN

STANDARD SANITARY SEWER DETAILS (2 OF 2)

ENGINEEERING DEPARTMENT

APPROVED BY : STEVEN J. VANDETTE, CITY ENGINEER

DATE : JANUARY 03, 2001

STATE OF MICHIGAN
STEVEN J. VANDETTE
ENGINEER NO. 28197
LICENSED PROFESSIONAL ENGINEER

STEVEN J. VANDETTE, P.E. 28197

REVISIONS	DATE	REMARKS

PROJECT NO.	SHEET NO.
DATE JANUARY 2001	
DRAWN BY G.S.F.	CHECKED BY W.D.J.

Sanitary 2 detail.dgn 7/12/2007 12:40:07 PM